Partnering to decarbonise energy systems

Darren Hill, General Manager
Commercial & Business Development

Prepared for Net Zero Emissions Mining WA conference

HORIZON POWER

Acknowledgement of Country

Ngala kaaditj Whadjuk Noongar moort keyen kaadak nidja boodja.

~

We would like to acknowledge the Traditional Custodians of this land, the Whadjuk people. We recognise and appreciate a continued connection through stories, traditions and living cultures and commit to building a brighter future together.

Horizon Power at a glance

2.3m square km
of regional and remote WA is serviced by Horizon Power

464
employees

51,951
customer connection points to network

8,356 km
of overhead and underground transmission and distribution lines

1,041 GWh
electricity delivered a year

7.7 GWh
of renewable energy purchased from customers and returned to the network

993 GWh
Electricity delivered a year

0.56 kg CO2-e/kWh
carbon emissions

3 Energy types
Gas, renewable energy (wind, solar and hydro) and diesel

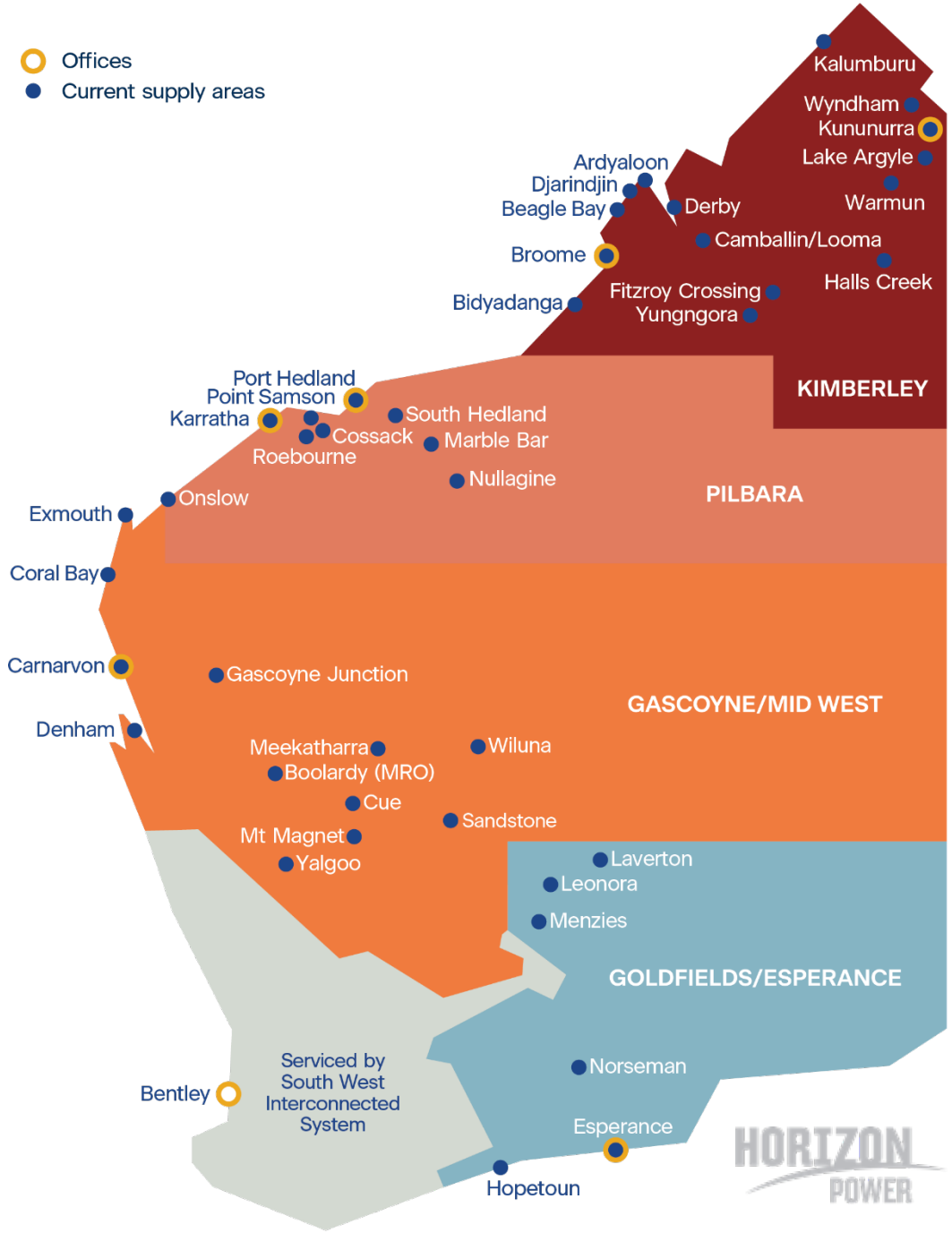

Decarbonisation opportunities in the Pilbara

Australian Industry Energy Transitions Initiative released it's phase two report earlier this month -
A guide to decarbonisation opportunities in regional Australia

30.6 $MtCO_2e$
Total abatement potential

25.3 to 53.8 TWh
Additional renewable energy required

A$17.8 to 38.4 billion
Additional investment required

102,000 - 243,000
Estimated jobs opportunity

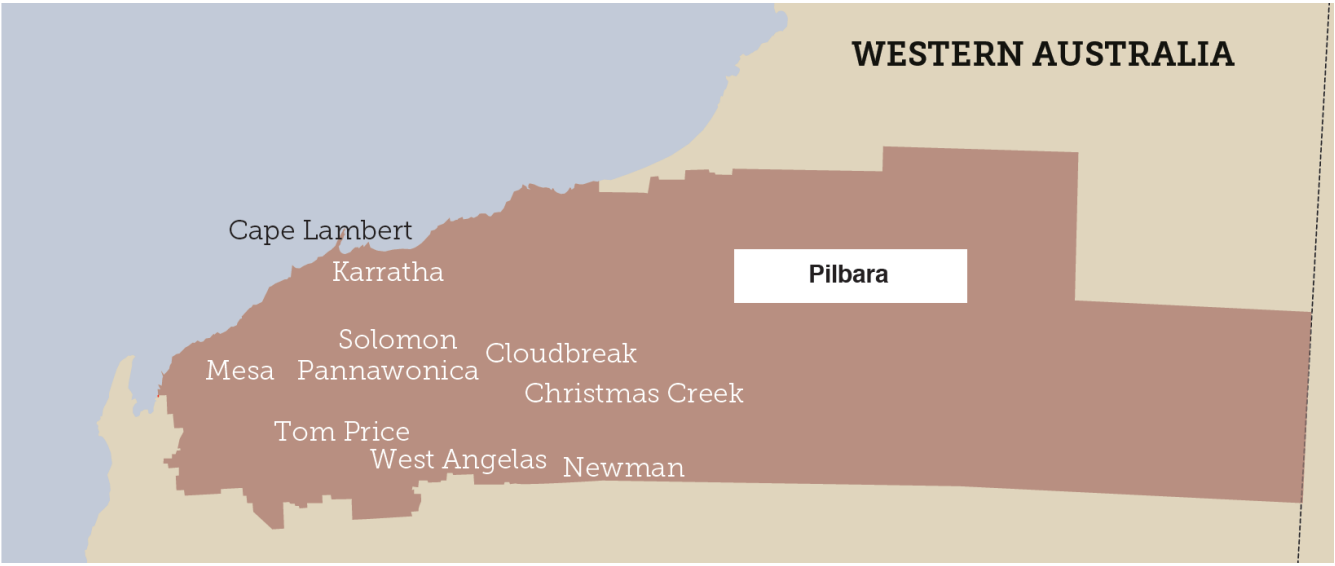

Source: Australian Industry Energy Transitions Initiative, Setting up industrial regions for net zero, Phase 2 report: A guide to decarbonisation opportunities in regional Australia, June 2022

Green hydrogen storage

Denham Hydrogen Demonstration Plant

- An Australian first, providing a working 'real world' model that could be replicated across regional and remote Australia.
- An end-to-end demonstration incorporating green hydrogen into a microgrid:
  - 704kW solar farm
  - 348kW electrolyser
  - Hydrogen compression & storage
  - 100kW fuel cell
- Generating 526MWh from solar and green hydrogen per year – power for 100 homes.
- Reduce diesel consumption & emissions by 16% – 335t carbon emissions and 140,000L diesel abated
- Will be completed in 2022

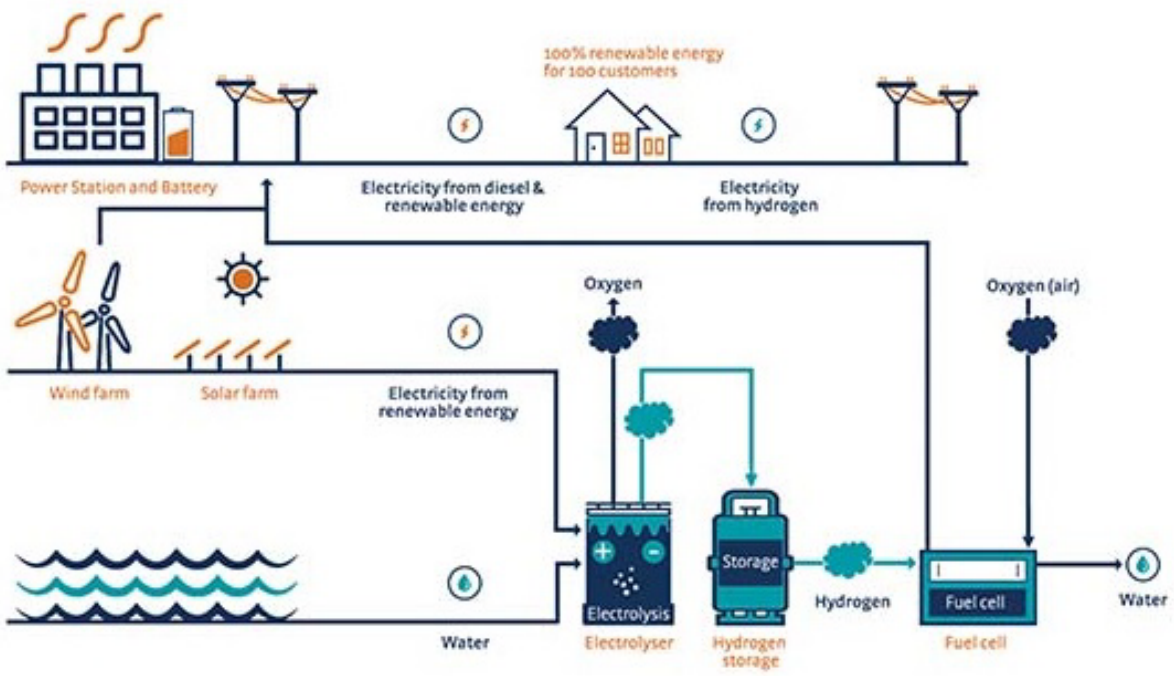

This project has been made possible through funding from the Australian Renewable Energy Agency's Advancing Renewables Program and the WA Government's Renewable Hydrogen Fund.

Orchestration technology & turning hydrocarbons off

A demonstration in Onslow

- Australian-first – powered town with renewable energy for 80mins in June and over 100mins in late Sept of 2021
- Innovative trial orchestrating power station, centralised solar and batteries with distributed solar and batteries:
  - 2.4MW distributed energy resources (residential & commercial solar and batteries)
  - 1MW centralised solar farm
  - 1MWh / 500kWh utility BESS
  - Modular gas fired power station
- Potential 820 tonne reduction in greenhouse gas emissions per year
- Technology will enable significant expansion of renewables – managed safely and with system stability

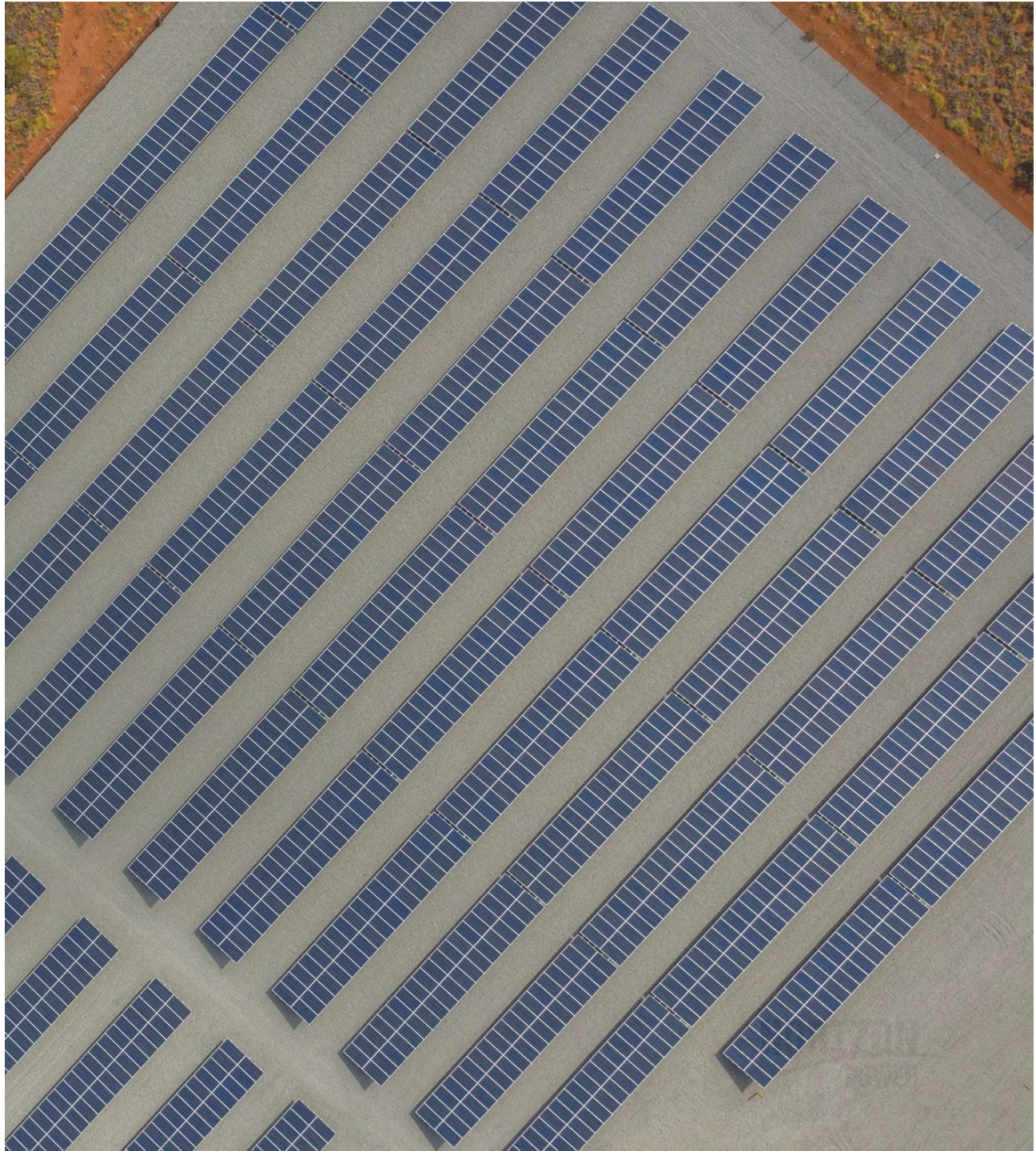

Orchestration technology across our footprint

- Rolling out Distributed Energy Resources Management System (DERMS) across all microgrids.
- Industry leading technology to create smart, integrated, and cleaner energy systems.
- The technology system enables safe, stable, and large-scale integration of customer and utility energy resources.
- Successful ground-breaking demonstration that powered Onslow with 100% renewable energy.

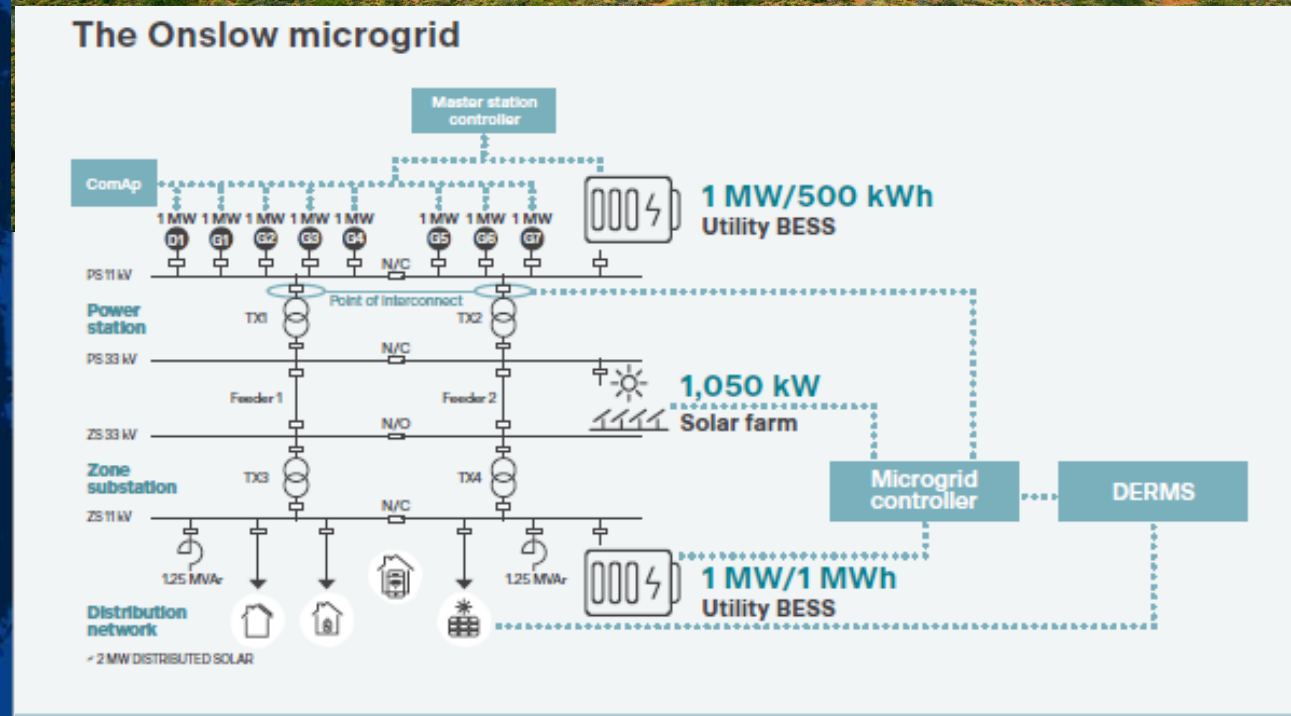

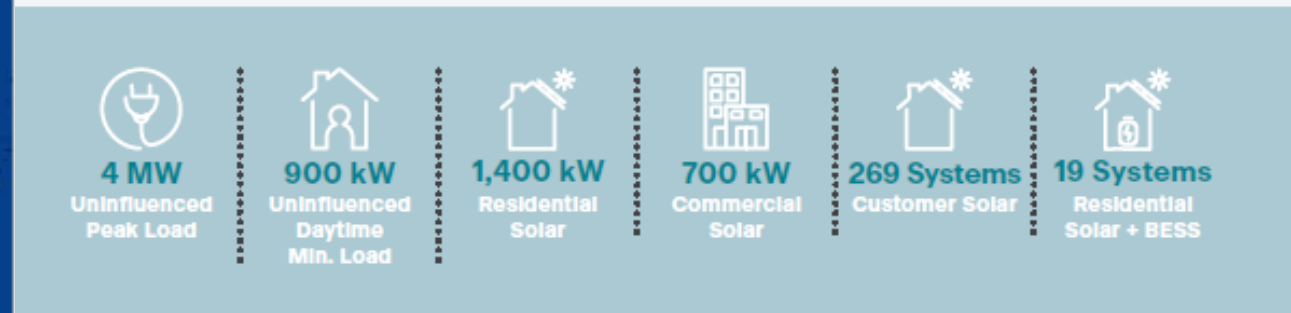

Decarbonisation:

What are we doing to get there?

Firmed Renewables

- Solar, wind and hydro-electric generation solutions
- Energy storage solutions including Lithium batteries, Vanadium flow and other long duration solutions, green hydrogen fuel cells

Fossil Fuel Displacement

- Renewable or synthetic diesel generation for baseload or firming;
- Gas turbines capable of burning blended or pure green hydrogen;
- Blend green hydrogen into the fuel mix for gas fired generation;

Distributed Energy Solutions

- Distributed Energy Resource Management Systems (DERMS) to all systems to maximise use of customer DER;
- Plan for and Purchase as much distributed customer sourced excess renewable energy and stored energy as possible;
- Long duration energy storage solutions to maximise the use of any curtailed customer distributed energy;
- Standalone Power Stations with a minimum 80% renewable generation;
- Ready systems for decarbonised transport, supporting the rapid uptake of electric and hydrogen vehicles including as storage;

Research

- Research & development to explore, trial and deploy new and emerging alternative generation, storage, distribution technologies.